NO.	4D450S-2021-A0

WEIGUANG®

SPECIFICATION 规格说明

HANGZHOU WEIGUANG ELECTRONIC CO.,LTD.

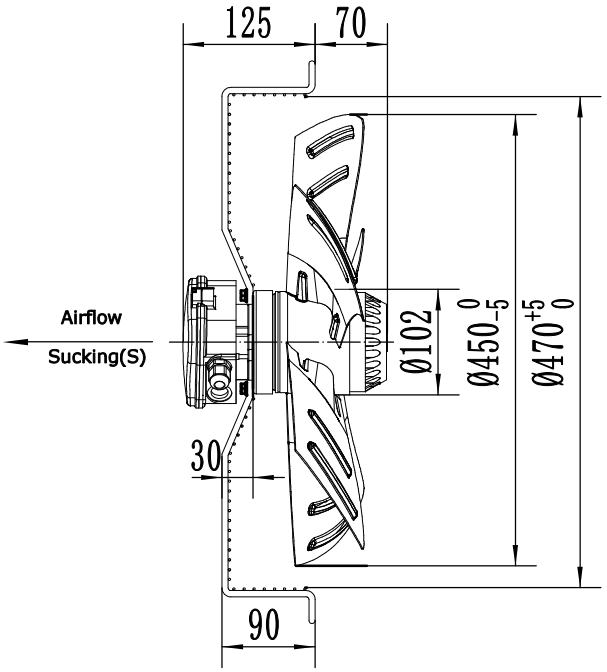

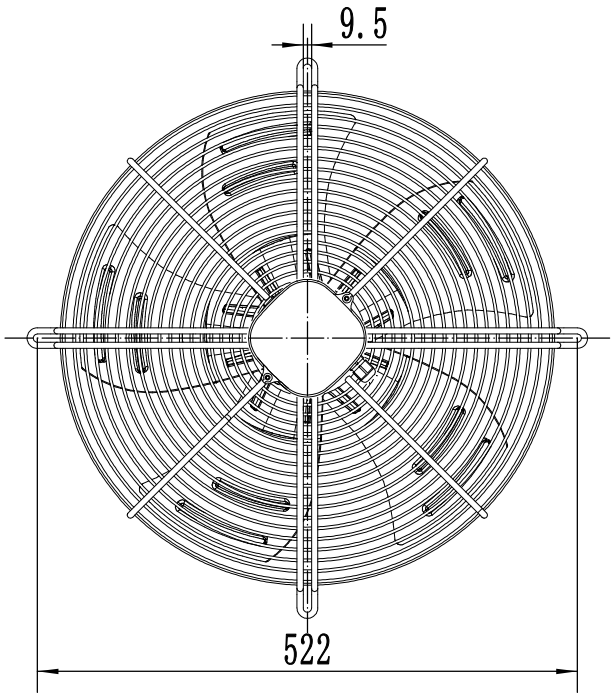

UNIT 类型	Axial fan motor 外转子轴流风机		
MOTOR 电机型式	Three phases motor		
MOTOR TYPE 电机型号	YWF4D-450S-102/60-G		
VOLTAGE 额定电压 (V)	△220	Y380	Y440
FREQUENCY 频率 (Hz)	60	60	60
INPUT POWER 输入功率 (W)	320	320	360
CURRENT 电流 (A)	0.97	0.56	0.62
SPEED 转速 (r/min)	1550	1550	1600
AIR FLOW 风量20Pa (m³/h)	5391	5391	5550
NOISE 噪音 (dBA)	70	70	71
ROTATION 旋转方向	CW ,looking into the end-shield 顺时针，从端盖端方向看		
INSULATION CLASS 绝缘等级	F		
MOTOR PROTECTION 电机保护	Thermocontact 150±5℃ 热保护器		
TEMPERATURE RISE 温升	75K max 运行温升不超过75K		
PROTECTION CLASS 防护等级	IP54		
OPERATING TYPE 工作定额	S1 连续工作制		
AMBIENT TEMPERATURE 适用环境温度	-30°C +60°C		
BEARINGS 轴承型式	Ball bearings 滚珠轴承		
MOUNTING TYPE 安装方式	Horizontal or Vertical 垂直或水平安装		
ELECTRICAL CONNECTION 电源线	Lead wire 1330UL 7G 0.50mm²+2G 0.30mm², Length 100mm in terminal box connected 接线盒（7芯0.5mm²+2芯0.3mm²线长100mm）		
APPROVALS 认证标记	CE		
NET WEIGHT/GROSS WEIGHT净重/毛重	8.0/9.0kg		
PACKING 包装	48.5*48.5*22cm		

LABEL (铭牌):

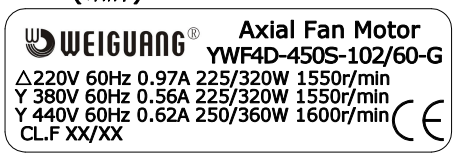

WIRING DIAGRAM（接线图）:

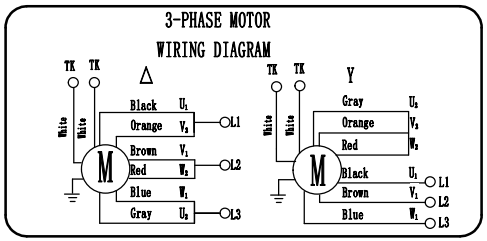

FLOW RATE CURVE（风量曲线）:

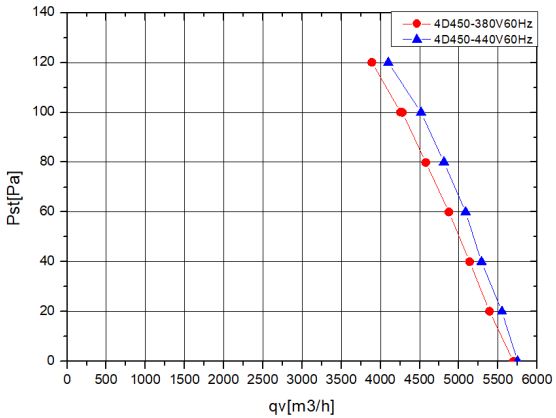

REV.	DESCRIPTION	APPROVED	DATE				SIGN	DATE
						DRN. BY		
						CHD. BY		
						ENG. BY		
						APP. BY		

TITLE
YWF4D-450S-102/60-G

PROJECTION

A4

SCALE

SHEET: of