NO.	6D600S-2022-A0

WEIGUANG®

SPECIFICATION 规格说明

HANGZHOU WEIGUANG ELECTRONIC CO.,LTD.

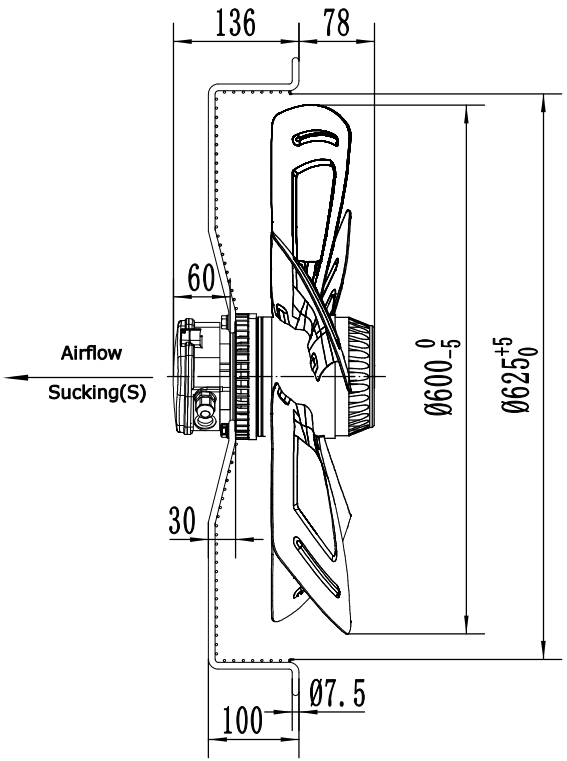

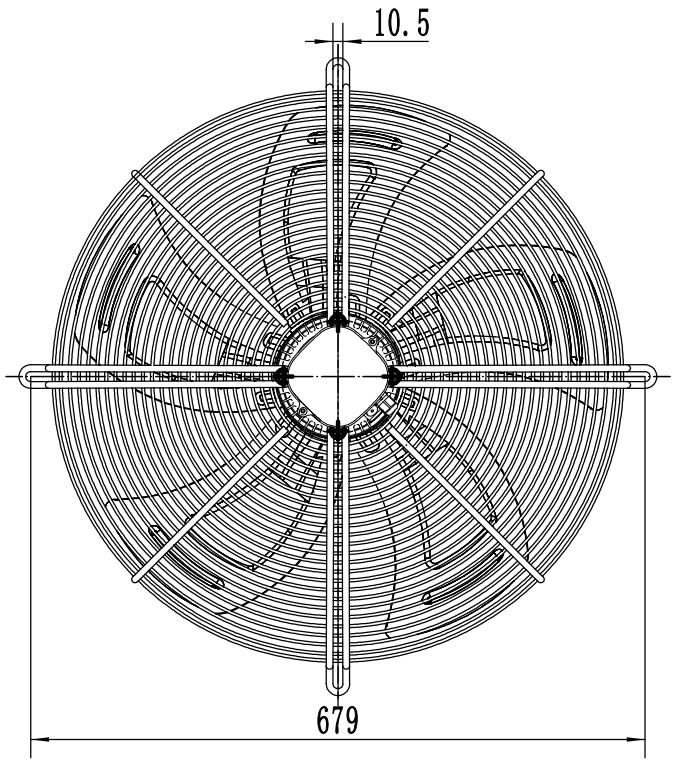

UNIT 类型	Axial fan motor		
MOTOR 电机型式	Three phases motor		
MOTOR TYPE 电机型号	YWF6D-600S-137/70-G		
VOLTAGE 额定电压 (V)	△220	Y380	Y440
FREQUENCY 频率 (Hz)	60	60	60
INPUT POWER 输入功率 (W)	500	500	550
CURRENT 电流 (A)	2.08	1.20	1.26
SPEED 转速 (r/min)	1100	1100	1130
AIR FLOW 20Pa 风量 (m³/h)	8998	8998	9216
NOISE 噪音 (dBA)	71	71	72
CAPACITOR 电容 (μF/450V)	-		
ROTATION 旋转方向	CW ,looking into the end-shield 顺时针，从端盖端方向看		
INSULATION CLASS 绝缘等级	F		
MOTOR PROTECTION 电机保护	Thermocontact 150±5℃ 热保护器		
TEMPERATURE RISE 温升	75K max 运行温升不超过75K		
PROTECTION CLASS 防护等级	IP54		
OPERATING TYPE 工作定额	S1 连续工作制		
AMBIENT TEMPERATURE 适用环境温度	-30°C +60°C		
BEARINGS 轴承型式	Ball bearings 滚珠轴承		
MOUNTING TYPE 安装方式	Horizontal or Vertical 垂直或水平安装		
ELECTRICAL CONNECTION 电源线	Lead wire 1330UL 7G 0.75mm²+2G 0.30mm² ,Length 100mm in terminal box connected 接线盒（7芯0.75mm²+2芯0.30mm²线长100mm）		
APPROVALS 认证标记	CE		
NET WEIGHT/GROSS WEIGHT 净重/毛重	14.4/16.6kg		
PACKING 包装	63.5*63.5*23cm		

LABEL (铭牌):

WEIGUANG® Axial Fan Motor
YWF6D-600S-137/70-G
△220V 60Hz 2.08A 350/500W 1100r/min
Y 380V 60Hz 1.20A 350/500W 1100r/min
Y 440V 60Hz 1.26A 375/550W 1130r/min
CL.F XX/XX

FLOW RATE CURVE（风量曲线）:

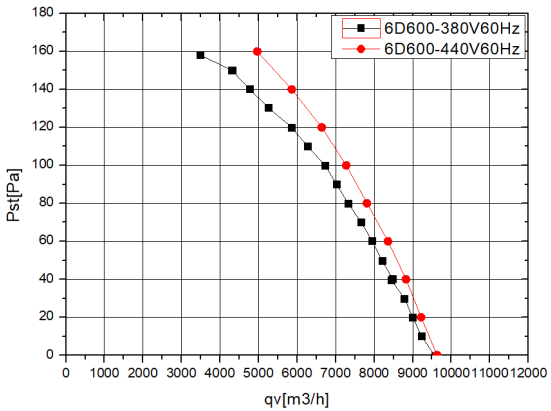

WIRING DIAGRAM（接线图）:

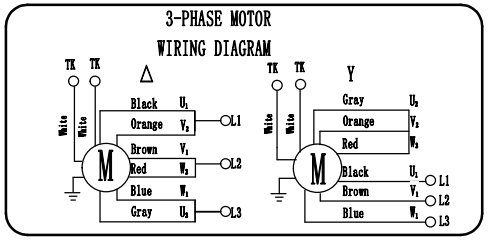

							SIGN	DATE
						DRN. BY		
						CHD. BY		
						ENG. BY		
REV.	DESCRIPTION	APPROVED	DATE			APP. BY		

TITLE
YWF6D-600S-137/70-G

PROJECTION

A4
SCALE
SHEET: of