NO.	6E630S-2022-A0

WEIGUANG®

SPECIFICATION 规格说明

HANGZHOU WEIGUANG ELECTRONIC CO.,LTD.

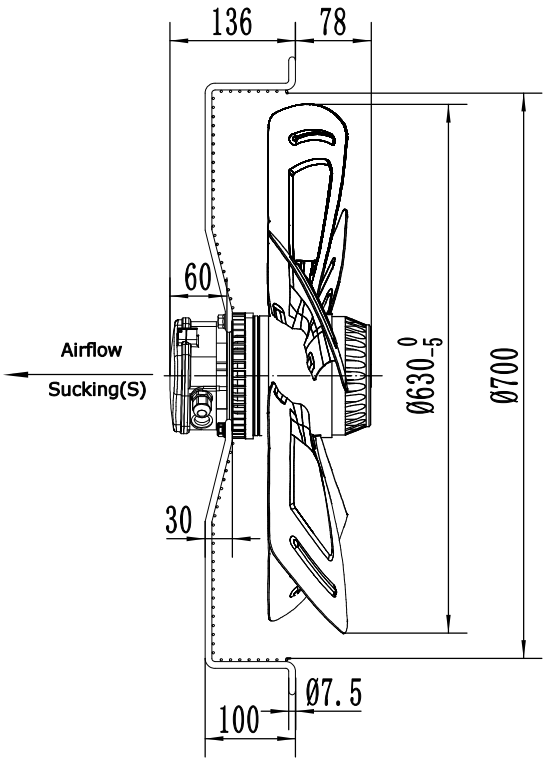

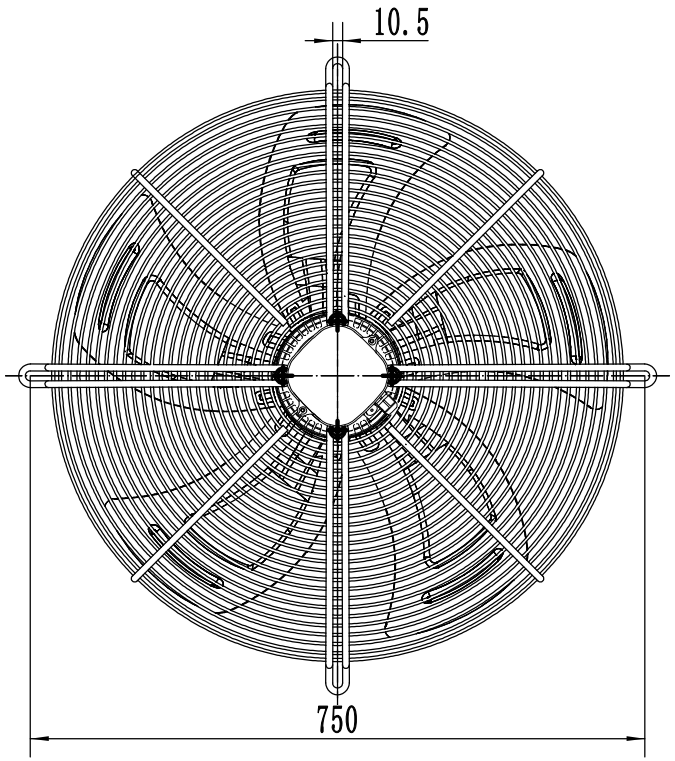

UNIT 类型	Axial fan motor
MOTOR 电机型式	Single phases motor with capacitor
MOTOR TYPE 电机型号	YWF6E-630S-137/70-G
VOLTAGE 额定电压 (V)	230
FREQUENCY 频率 (Hz)	50/60
INPUT POWER 输入功率 (W)	480/570
CURRENT 电流 (A)	2.40/2.60
SPEED 转速 (r/min)	920/1100
AIR FLOW 20Pa 风量 (m³/h)	8710/9926
NOISE 噪音 (dBA)	70/72
CAPACITOR 电容 (μF/450V)	12
ROTATION 旋转方向	CW ,looking into the end-shield 顺时针，从端盖端方向看
INSULATION CLASS 绝缘等级	F
MOTOR PROTECTION 电机保护	Thermocontact 150±5℃ 热保护器
TEMPERATURE RISE 温升	75K max 运行温升不超过75K
PROTECTION CLASS 防护等级	IP54
OPERATING TYPE 工作定额	S1 连续工作制
AMBIENT TEMPERATURE 适用环境温度	-30°C +60°C
BEARINGS 轴承型式	Ball bearings 滚珠轴承
MOUNTING TYPE 安装方式	Horizontal or Vertical 垂直或水平安装
ELECTRICAL CONNECTION 电源线	Lead wire RV-90 4G 0.75mm² ,Length 100mm in terminal box connected 接线盒（4芯0.75mm²线长100mm）
APPROVALS 认证标记	CE
NET WEIGHT/GROSS WEIGHT 净重/毛重	16.1/18.5kg
PACKING 包装	72.0*72.0*24cm

LABEL (铭牌):

WEIGUANG® Axial Fan Motor
YWF6E-630S-137/70-G
220V 60Hz 2.60A 387/570W 1100r/min
12 μF/450V CL.F XX/XX
CE

FLOW RATE CURVE（风量曲线）:

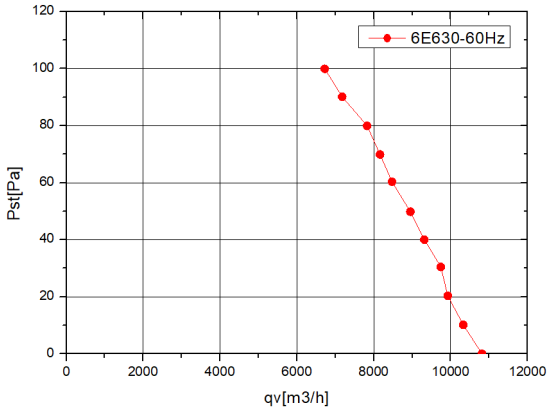

WIRING DIAGRAM（接线图）:

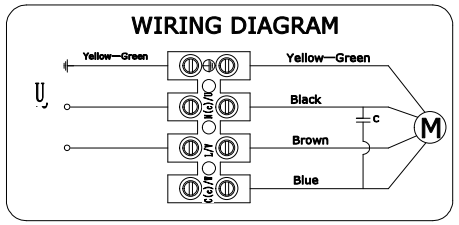

							SIGN	DATE
						DRN. BY		
						CHD. BY		
						ENG. BY		
REV.	DESCRIPTION	APPROVED	DATE			APP. BY		

TITLE
YWF6E-630S-137/70-G

PROJECTION

A4
SCALE
SHEET: of